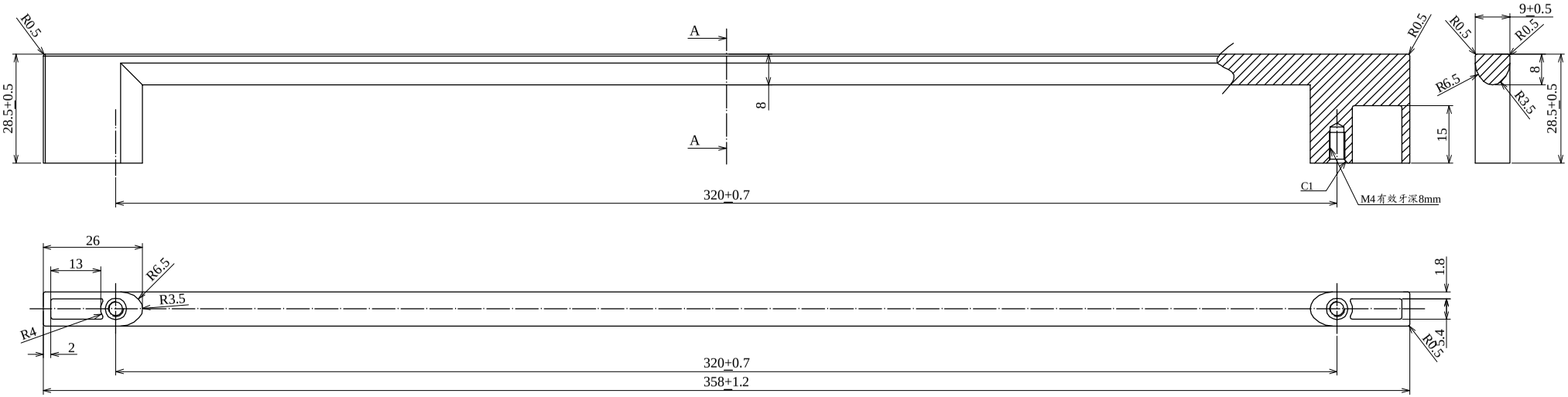

HANGZHOU ADVANCE HARDWARE MFG.CORP					
DESCRIPTION	DMZ-21372-320	SCALE	1:1		
SPECIFIC	SY1019	UNIT	mm		
MATERIAL	Zamak	DATE	2012..07.04		